JUSTIME SINCE 1976

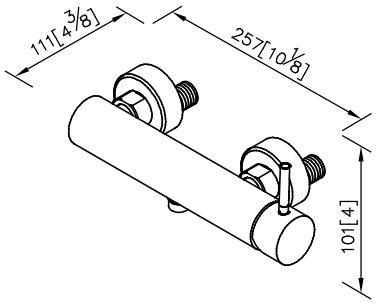

unit: mm[inch]

Shower Faucet

6765-93-80P1
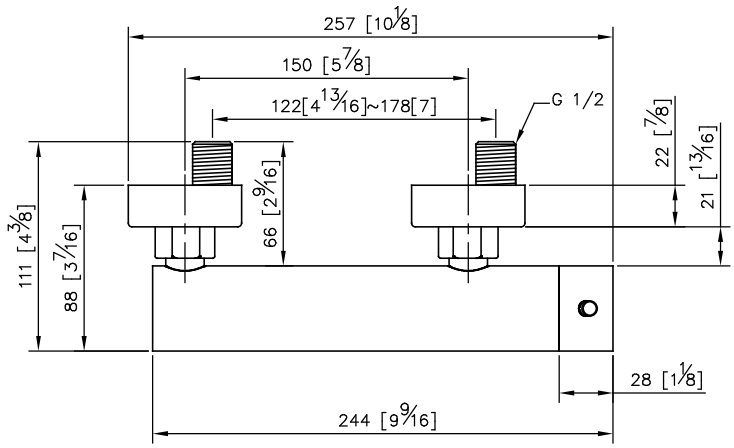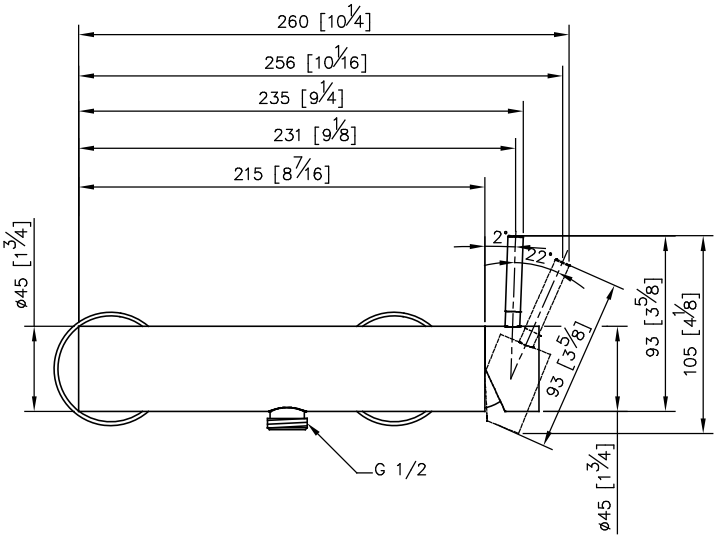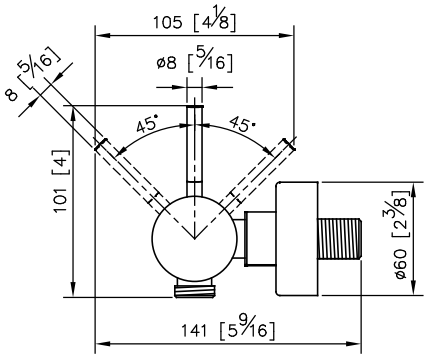
1.Brass of casting body meets ISO CuZn40Pb standard.
2.Premium metal construction for durability.
3.Justime finishes resist corrosion and tarnish.
4.Finish meets the standard of ASTM-SC2.
5.The available distance between two centers of wall water-outlet is 122mm to 178mm.
6.With R 1/2 to water supply wall outlet.
7.Coordinates with other products in Pan1 collection.